Microwave Filters

INTRODUCTION

A microwave filter is a two-port network used to control the frequency response at a certain point in a microwave system by providing transmission at frequencies within the passband of the filter and attenuation in the stopband of the filter. Typical frequency responses include low-pass, high-pass, bandpass, and band-reject characteristics. Applications can be found in virtually any type of microwave communication, radar, or test and measurement system.

We limit this tutorial to a procedure called the insertion loss method, which uses network synthesis techniques to design filters with a completely specified frequency response. The design is simplified by beginning with low-pass filter prototypes that are normalized in terms of impedance and frequency. Transformations are then applied to convert the prototype designs to the desired frequency range and impedance level.

The insertion loss method of filter design provides lumped element circuits. For microwave applications such designs usually must be modified to use distributed elements consisting of transmission line sections. The Richard's transformation and the Kuroda identities provide this step. We will also discuss transmission line filters using stepped impedances and coupled lines; filters using coupled resonators will also be briefly described.

FILTER DESIGN BY THE INSERTION LOSS METHOD

The insertion loss method allows a high degree of control over the passband and stopband amplitude and phase characteristics, with a systematic way to synthesize a desired response. The necessary design trade-offs can be evaluated to best meet the application requirements. If, for example, a minimum insertion loss is most important, a binomial response could be used; a Chebyshev response would satisfy a requirement for the sharpest cutoff. If it is possible to sacrifice the attenuation rate, a better phase response can be obtained by using a linear phase filter design. And in all cases, the insertion loss method allows filter performance to be improved in a straightforward manner, at the expense of a higher order filter. For the filter prototypes to be discussed below, the order of the filter is equal to the number of reactive elements.

*Characterization by Power Loss Ratio*the

In the insertion loss method a filter response is defined by its insertion loss, or *power loss ratio, PLR:*

(1) $$P_{LR} = \frac{\text{Power available from source}}{\text{Power delivered to load}} = \frac{P_{inc}}{P_{load}} = \frac{1}{1-|\Gamma(\omega)|^2}$$

Observe that this quantity is the reciprocal of $|S_{12}|^2$ if both load and source are matched. The insertion loss (IL) in dB is (2) $IL = 10\log P_{LR}$

We know that $|\Gamma(\omega)|^2$ is an even function of ω ; therefore it can be expressed as a polynomial in ω^2. Thus we can write

$$(3) \qquad |\Gamma(\omega)|^2 = \frac{M(\omega^2)}{M(\omega^2)+N(\omega^2)}$$

where M and N are real polynomials in ω^2. Substituting this form in (1) gives the following:

$$(4) \qquad P_{LR} = 1 + \frac{M(\omega^2)}{N(\omega^2)}$$

Thus, for a filter to be physically realizable its power loss ratio must be of the form in (4). Notice that specifying the power loss ratio simultaneously constrains the reflection coefficient, $\Gamma(\omega)$. We now present two practical filter responses.

Maximally flat

This characteristic is also called the binomial or Butterworth response, and is optimum in the sense that it provides the flattest possible passband response for a given filter complexity, or order. For a low-pass filter, it is specified by

$$(5) \qquad P_{LR} = 1 + k^2\left(\frac{\omega}{\omega_c}\right)^{2N}$$

where N is the order of the filter, and ω_c, is the cutoff frequency. The passband extends *from* $\omega = 0$ to $\omega = \omega_c$; at the band edge the power loss ratio is $1 + k^2$. If we choose this as the -3 dB point, as is common, we have $k = 1$, which we will assume from now on. For $\omega > \omega_c$, the attenuation increases monotonically with frequency, as shown in Figure 1. For $\omega >> \omega_c$, $P_{LR} \approx k^2(\omega/\omega_c)^{2N}$, which shows that the insertion loss increases at the rate of 20 N dB/decade. Like the binomial response for multisection quarter-wave matching transformers, the first $(2N - 1)$ derivatives of (5) are zero at $\omega = 0$.

Equal ripple

If a Chebyshev polynomial is used to specify the insertion loss of an N-order low-pass filter as

$$(6) \qquad P_{LR} = 1 + k^2 T_N^2\left(\frac{\omega}{\omega_c}\right),$$

then a sharper cutoff will result, although the passband response will have ripples of amplitude $1+k^2$, as shown in Figure 1, since $T_N(x)$ oscillates between ± 1 for $|x| \leq 1$. Thus, k^2 determines the passband ripple level. For large x, $T_N(x) \approx \frac{1}{2}(2x)^N$, so for $\omega >> \omega_c$, the insertion loss becomes

$$P_{LR} = \frac{k^2}{4}\left(\frac{2\omega}{\omega_c}\right)^{2N},$$

which also increases at the rate of 20 N dB/decade. But the insertion loss for the Chebyshev case is $(2^{2N})/4$ greater than the binomial response, at any given frequency where $\omega >> \omega_c$.

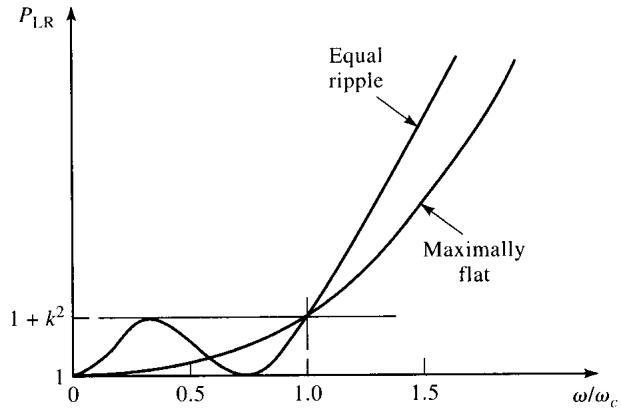

Figure 1. Maximally flat and equal -ripple low-pass filter responses (N=3).

Low-Pass Filter Prototypes

Figure 2 shows normalized ladder circuits for low-pass filter prototypes. We know that the transfer functions for these circuits have N poles so that polynomials of degree N are in the denominator of the transfer functions. Proper selection of the components will make the magnitude of the transfer function such that Equation (5) is satisfied. Table 1 [1] gives the element values for the maximally flat low-pass filter prototypes for $N = 1$ to 10.

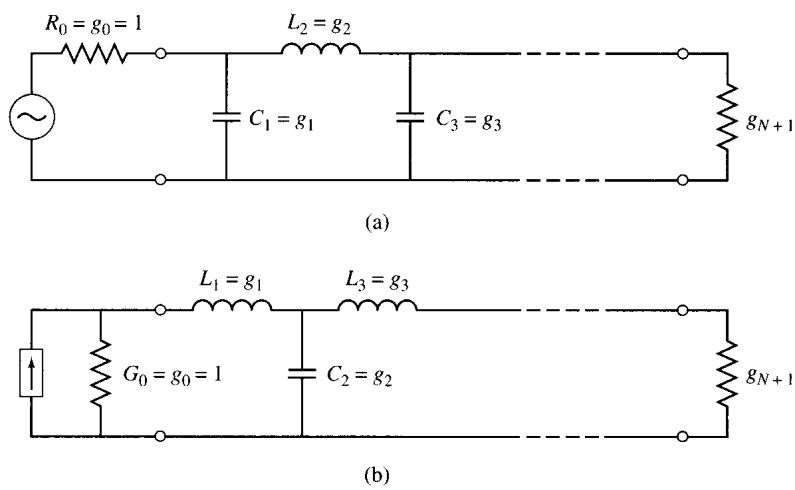

Figure 2. Ladder circuits for low-pass filter prototypes and their element definitions. (a Prototype beginning with a shunt element. (b) Prototype beginning with a series element.

Table 1. Element values for maximally flat low-pass filter prototypes ($g_0 = 1$, $\omega_c = 1$, $N = 1$ to 10.)

N	g_1	g_2	g_3	g_4	g_5	g_6	g_7	g_8	g_9	g_{10}	g_{11}
1	2.0000	1.0000									
2	1.4142	1.4142	1.0000								
3	1.0000	2.0000	1.0000	1.0000							
4	0.7654	1.8478	1.8478	0.7654	1.0000						
5	0.6180	1.6180	2.0000	1.6180	0.6180	1.0000					
6	0.5176	1.4142	1.9318	1.9318	1.4142	0.5176	1.0000				
7	0.4450	1.2470	1.8019	2.0000	1.8019	1.2470	0.4450	1.0000			
8	0.3902	1.1111	1.6629	1.9615	1.9615	1.6629	1.1111	0.3902	1.0000		
9	0.3473	1.0000	1.5321	1.8794	2.0000	1.8794	1.5321	1.0000	0.3473	1.0000	
10	0.3129	0.9080	1.4142	1.7820	1.9754	1.9754	1.7820	1.4142	0.9080	0.3129	1.0000

We can also select components to make the magnitude of the transfer function such that Equation (6) is satisfied. Table 2 [2] gives the element values for the 0.5 dB and 3.0 dB equal ripple filter prototypes for $N = 1$ to 10.

FILTER TRANSFORMATIONS

The low-pass filter prototypes of the previous section were normalized designs having a source impedance of $R_s = 1\ \Omega$ and a cutoff frequency of $\omega_c = 1$. The designs must be scaled in terms of impedance and frequency, and converted to give high-pass, bandpass, or bandstop characteristics. Several examples will be presented to illustrate the design procedure.

Impedance and Frequency Scaling

Impedance scaling. The network needs to be scaled from a source resistance of 1 to R_0 and a cutoff frequency of 1 to ω_c. If we let primes denote impedance and frequency scaled quantities, we have the following transformation equations for the kth element in the low-pass network.

Table 2. Element values for equal ripple low-pass filter prototypes ($g_0 = 1$, $\omega_c = 1$, $N = 1$ to 10, 0.5 dB and 3.0 dB ripple.)

						0.5 dB Ripple					
N	g_1	g_2	g_3	g_4	g_5	g_6	g_7	g_8	g_9	g_{10}	g_{11}
1	0.6986	1.0000									
2	1.4029	0.7071	1.9841								
3	1.5963	1.0967	1.5963	1.0000							
4	1.6703	1.1926	2.3661	0.8419	1.9841						
5	1.7058	1.2296	2.5408	1.2296	1.7058	1.0000					
6	1.7254	1.2479	2.6064	1.3137	2.4758	0.8696	1.9841				
7	1.7372	1.2583	2.6381	1.3444	2.6381	1.2583	1.7372	1.000			
8	1.7451	1.2647	2.6564	1.3590	2.6964	1.3389	2.5093	0.8796	1.9841		
9	1.7504	1.2690	2.6678	1.3673	2.7239	1.3673	2.6678	1.2690	1.7504	1.0000	
10	1.7543	1.2721	2.6754	1.3725	2.7392	1.3806	2.7231	1.3485	2.5239	0.8842	1.9841
						3.0 dB Ripple					
N	g_1	g_2	g_3	g_4	g_5	g_6	g_7	g_8	g_9	g_{10}	g_{11}
1	1.9953	1.0000									
2	3.1013	0.5339	5.8095								
3	3.3487	0.7117	3.3487	1.0000							
4	3.4389	0.7483	4.3471	0.5920	5.8095						
5	3.4817	0.7618	4.5381	0.7618	3.4817	1.0000					
6	3.5045	0.7685	4.6061	0.7929	4.4641	0.6033	5.8095				
7	3.5182	0.7723	4.6386	0.8039	4.6386	0.7723	3.5182	1.0000			
8	3.5277	0.7745	4.6575	0.8089	4.6990	0.8018	4.4990	0.6073	5.8095		
9	3.5340	0.7760	4.6692	0.8118	4.7272	0.8118	4.6692	0.7760	3.5340	1.0000	
10	3.5384	0.7771	4.6768	0.8136	4.7425	0.8164	4.7260	0.8051	4.5142	0.6091	5.8095

(7*a*) $$L_k' = \frac{R_0 L_k}{\omega_c},$$

(7*b*) $$C_k' = \frac{C_k}{R_0 \omega_c}.$$

Low-pass to high-pass transformation. The frequency substitution where,

(8) $$\omega \leftarrow -\frac{\omega_c}{\omega}$$

can be used to convert a low-pass response to a high-pass response. This substitution maps $\omega = 0$ to $\omega = \Gamma$ э , and vice versa; cutoff occurs when $\omega = \Gamma \omega_c$. The negative sign is needed to convert inductors (and capacitors) to realizable capacitors (and inductors). Applying (8) and impedance scaling to the series reactances, $j\omega L_k$, and the shunt susceptances, $j\omega C_k$, of the prototype filter gives

(9*a*) $$C_k' = \frac{1}{R_0 \omega_c L_k},$$

(9*b*) $$L_k' = \frac{R_0}{\omega_c C_k}.$$

EXAMPLE 1: Low-Pass Filter Design Comparison

Design a maximally flat low-pass filter with a cutoff frequency of 2 GHz, impedance of 50 Ω and at least 15 dB insertion loss at 3 GHz. Compute and plot the amplitude response and group delay for f = 0 to 4 GHz, and compare with an equal-ripple (3.0 dB ripple) filter having the same order.

Solution (The solution method for the maximally flat response will be shown here. An exercise for the student is to do the 3 dB equal-ripple filter.)

First find the required order of the maximally flat filter to satisfy the insertion loss specification at 3 GHz. We have that IL = 10 log P_{LR} = 10 log $(1+(\omega/\omega_c)^{2N})$ = 15. This gives N = ln $(10^{15/10} - 1)/2/\ln \omega/\omega_c = 4.22$. We will use N=5. Table 1 gives the prototype element values as

$g_1 = 0.618$
$g_2 = 1.618$
$g_3 = 2.000$
$g_4 = 1.618$
$g_5 = 0.618$

Then (7) can be used to obtain the scaled element values:

$C_1' = 0.984$ pF,
$L_2' = 6.438$ nH,
$C_3' = 3.183$ pF,
$L_4' = 6.438$ nH,
$C_5' = 0.984$ pF.

The final filter circuit, using Serenade Design Suite, is shown in Figure 3; the ladder circuit of Figure 2a was used, but that of Figure 2b could have been used just as well. The response for the simulation is shown in Figure 4.

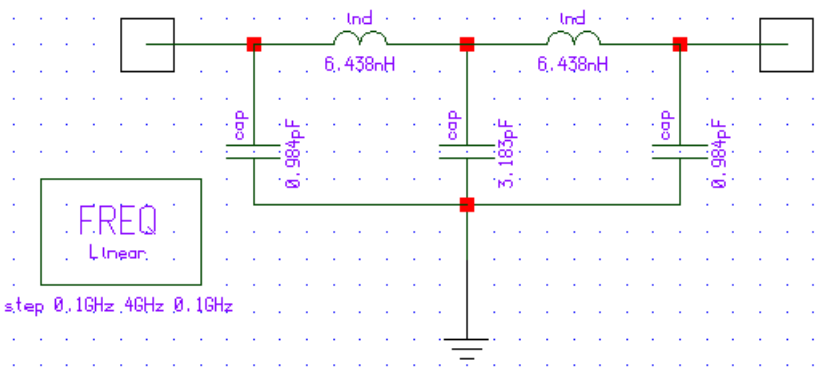

Figure 3 Low-pass filter schematic using Serenade Design Suite.

The $|S_{21}|$ response is shown in Figure 4. The group delay activation takes place in the linear frequency block. Figure 5 shows that lines 2 and 4 have to be filled in as shown. GD on the reports menu is selected for display in a separate window. The group delay is then shown in Figure 6. Clearly, the maximally flat response filter does not produce a linear phase response. This can be accomplished by selecting a different set of components based upon generating a transfer function with linear phase response.

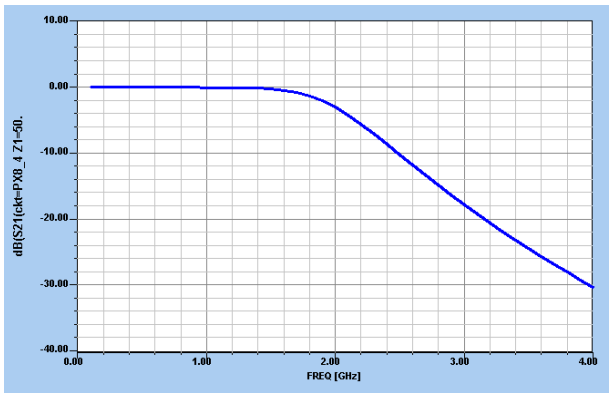

Figure 4. Amplitude response for the low-pass filter of Figure 3.

Linear Frequency

	Property	Value
1	Freq	step 0.1GHz 4GHz 0.1GHz
2	gd	on
3	pert	*opt*
4	option	s

Figure 5. Linear frequency block to do the group delay response.

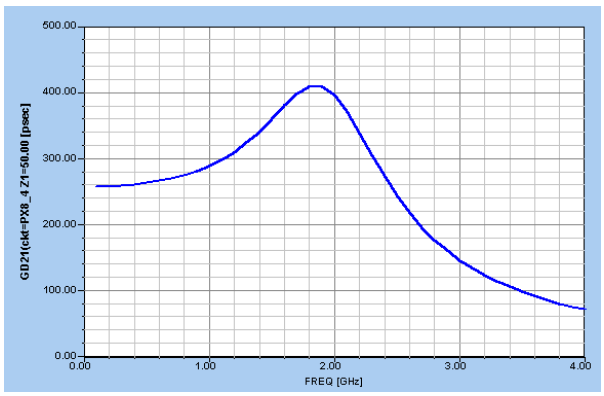

Figure 6. Group delay for the low-pass filter of Figure 3

Bandpass and Bandstop Transformation

Low-pass prototype filter designs can also be transformed to have the bandpass or bandstop responses. If ω_1 and ω_2 denote the edges of the passband, then a bandpass response can be obtained using the following frequency substitution:

(10a) $$\omega \leftarrow \frac{\omega_0}{\omega_2 - \omega_1}\left(\frac{\omega}{\omega_0} - \frac{\omega_0}{\omega}\right) = \frac{1}{\Delta}\left(\frac{\omega}{\omega_0} - \frac{\omega_0}{\omega}\right)$$

where

(10b) $$\Delta = \frac{\omega_2 - \omega_1}{\omega_0}$$

is the fractional bandwidth of the passband. The center frequency, ω_0, could be chosen as the arithmetic mean of w1 and w2, but the equations are simpler if it is chosen as the geometric mean, $\omega_0 = (\omega_1\omega_2)^{1/2}$. Then the transformation of (10) maps the bandpass characteristics to the low-pass response giving the following new filter elements:

(1) A series inductor is transformed to a series *LC* circuit with impedance and frequency scaled values

(11a) $$L'_k = \frac{L_k R_0}{\omega_0 \Delta}$$

(11b) $$C'_k = \frac{\Delta}{\omega_0 L_k R_0}$$

(2) A shunt capacitor is transformed to a shunt *LC* circuit with impedance and frequency scaled values

(11c) $$L'_k = \frac{\Delta R_0}{\omega_0 C_k}$$

(11d) $$C'_k = \frac{C_k}{\omega_0 \Delta R_0}$$

The inverse transformation can be used to obtain a bandstop response. Thus,

(12) $$\omega \leftarrow \Delta\left(\frac{\omega}{\omega_0} - \frac{\omega_0}{\omega}\right)^{-1}.$$

Then series inductors of the low-pass prototype are converted to parallel *LC* circuits having impedance and frequency scaled values

(13a) $$L'_k = \frac{\Delta L_k R_0}{\omega_0}$$

(13b) $$C'_k = \frac{1}{\omega_0 \Delta L_k R_0}$$

The shunt capacitors of the low-pass prototype are converted to series *LC* circuits having impedance and frequency scaled values

(13c) $$L'_k = \frac{R_0}{\omega_0 \Delta C_k}$$

(13d) $$C'_k = \frac{\Delta C_k}{\omega_0 R_0}$$

The element transformations from a low-pass prototype to a high-pass, bandpass, or bandstop filter are summarized in Table 3. These results do not include impedance scaling, which can be made by multiplying the values of L, R_s and R_L by R_0 and dividing the values of C by R_0.

Table 3. Summary of prototype filter transformations

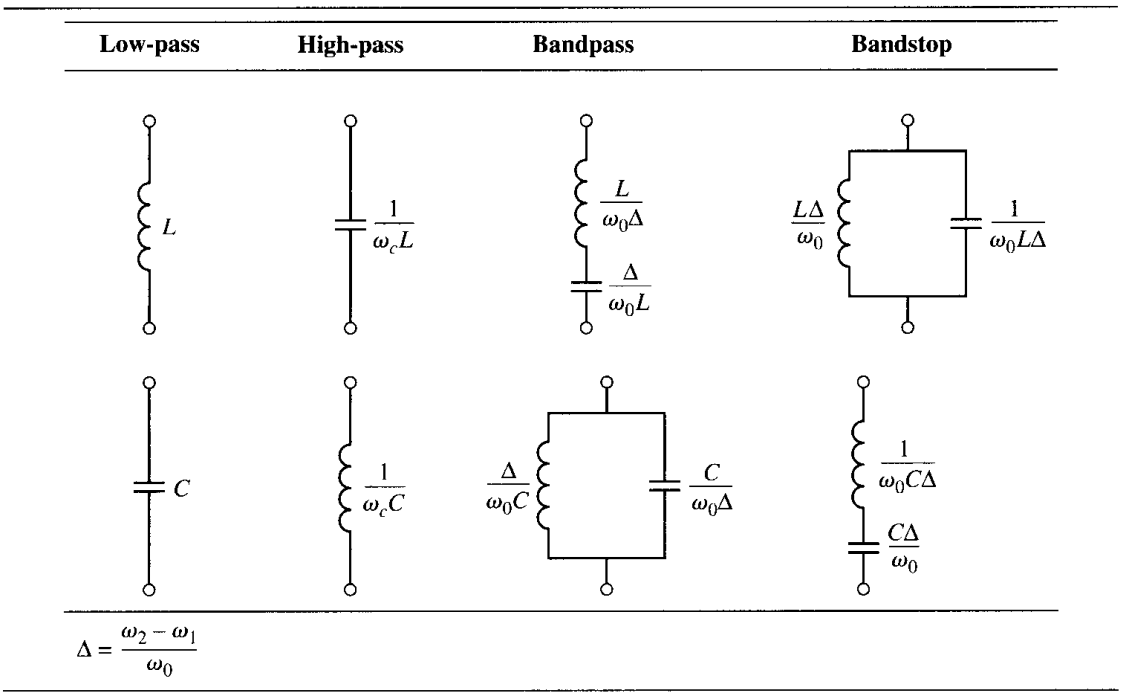

EXAMPLE 2: Bandpass Filter Design

Design a bandpass filter having a 0.5 dB equal-ripple response, with N = 3. The center frequency is I GHz, the bandwidth is 10%, and the impedance is *50* Ω .

Solution

From Table 3 the element values for the low-pass prototype circuit are given as

$g1 = 1.5963 = L_1$,

$g2 = 1.0967 = C_2$,

$g3 = 1.5963 = L_3$,

$g4 = 1.000 = R_L$

Then (11) give the impedance-scaled and frequency-transformed element values for the circuit as

L'_1 = 127.0 nH,

C'_1 = 0.199 pF,

L'_2 = 0.726 nH,

C'_2 = 34.91 pF,

L'_3 = 127.0 nH,

C'_3 = 0.199 pF.

The Serenade Design Suite schematic and $|S_{21}|$ results are shown in Figures 7 and 8.

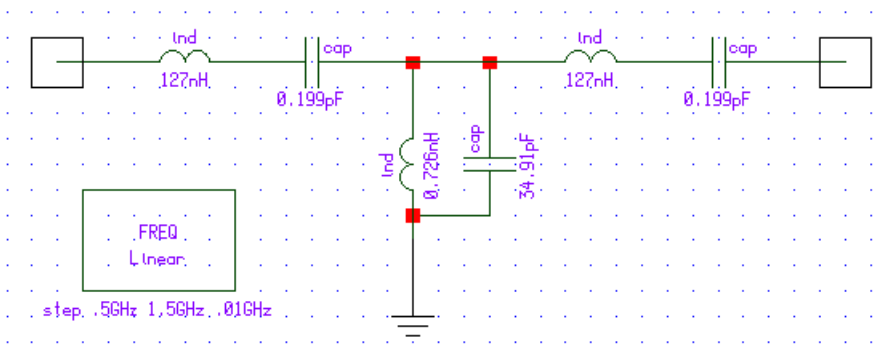

Figure 7. Schematic of bandpass filter using Serenade Design Suite

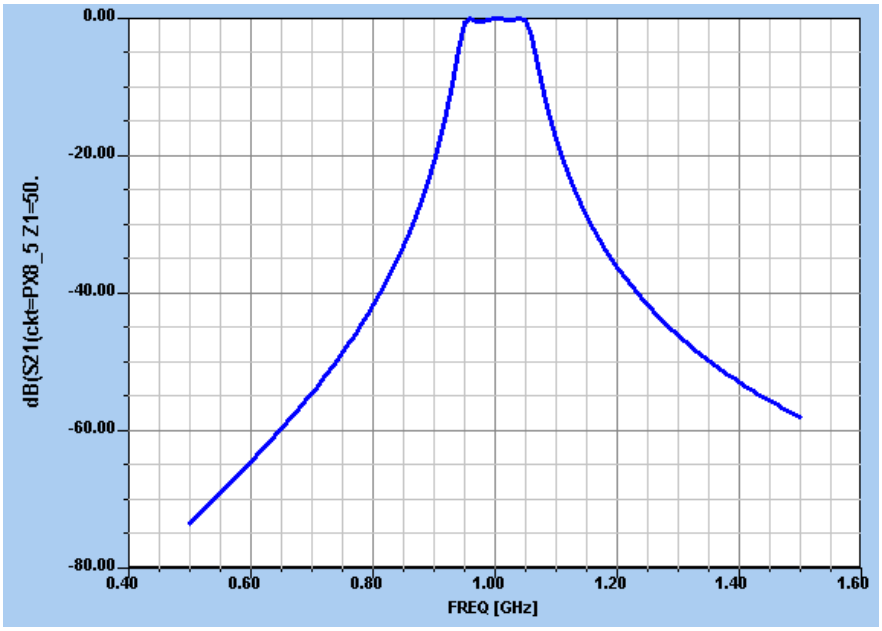

Figure 8. |S21| (dB) results from Serenade Design Suite for the bandpass filter.

FILTER IMPLEMENTATION

The lumped-element filter design discussed in the previous sections generally works well at low frequencies, but two problems arise at microwave frequencies. First, lumped elements such as inductors and capacitors are generally available only for a limited range of values and are difficult to implement at microwave frequencies, but must be approximated with distributed components. In addition, at microwave frequencies the distances between filter components are not negligible. Richard's transformation is used to convert lumped elements to transmission line sections, while Kuroda's identities can be used to separate filter elements by using transmission line sections. Because such additional transmission line sections do not affect the filter response, this type of design is called *redundant* filter synthesis. It is possible to design microwave filters that take advantage of these sections to improve the filter response [2]; such *nonredundant* synthesis does not have a lumped-element counterpart.

Richard's Transformation

The transformation,

$$\Omega = \tan \beta l = \tan\left(\frac{\omega l}{v_p}\right) \tag{14}$$

maps the w plane to the Ω plane, which repeats with a period of $\omega\, l/v_p = 2\pi$. This transformation was introduced by P. Richard [3] to synthesize an *LC* network using open- and short-circuited transmission lines. Thus, if we replace the frequency variable ω with Ω , the reactance of an inductor can be written as

$$jX_L = j\Omega L = jL \tan \beta l, \tag{15a}$$

and the susceptance of a capacitor can be written as

$$jX_C = j\Omega C = jC \tan \beta l, \tag{15b}$$

These results indicate that an inductor can be replaced with a short-circuited stub of length $\beta\, l$ and characteristic impedance *L*, while a capacitor can be replaced with an open circuited stub of length $\beta\, l$ and characteristic impedance 1/*C*. A unity filter impedance is assumed.

Cutoff occurs at unity frequency for a low-pass filter prototype; to obtain the same cutoff frequency for the Richard's-transformed filter, (14) shows that

$$\Omega = 1 = \tan \beta l$$

which gives a stub length of $l = \lambda/8$, where λ is the wavelength of the line at the cutoff frequency, ω_c. At the frequency $\omega_0 = 2\omega_c$, the lines will be $\lambda/4$ long, and an attenuation pole will occur. At frequencies away from w_c, the impedances of the stubs will no longer match the original lumped-element impedances, and the filter response will differ from the desired prototype response. Also, the response will be periodic in frequency, repeating every $4\omega_c$.

In principle, then, the inductors and capacitors of a lumped-element filter design can be replaced with short-circuited and open-circuited stubs. Since the lengths of all the stubs are the same ($\lambda/8$ at ω_c), these lines are called *commensurate lines.*

Kuroda's Identities

The four Kuroda identities use redundant transmission line sections to achieve a more practical microwave filter implementation by performing any of the following operations:

- Physically separate transmission line stubs
- Transform series stubs into shunt stubs, or vice versa
- Change impractical characteristic impedances into more realizable ones.

The additional transmission line sections are called *unit elements* and are λ /8 long at ω_c; the unit elements are thus commensurate with the stubs used to implement the inductors and capacitors of the prototype design.

The four identities are illustrated in Table 4, where each box represents a unit element, or transmission line, of the indicated characteristic impedance and length (λ /8 at ω_c). The inductors and capacitors represent short-circuit and open-circuit stubs, respectively.

EXAMPLE 3: Low-Pass Filter Design Using Stubs

Design a low-pass filter for fabrication using microstrip lines. The specifications are: cutoff frequency of 4 GHz, third order, impedance of 50 Ω , and a 3 dB equal-ripple characteristic.

Solution

We now go to Mathcad to implement the solution. The Mathcad document is shown in Figure 8. Figure 9 shows the evolution of the design from the prototype circuit to the microstrip fabrication.

Table 4. The Four Kuroda Identities

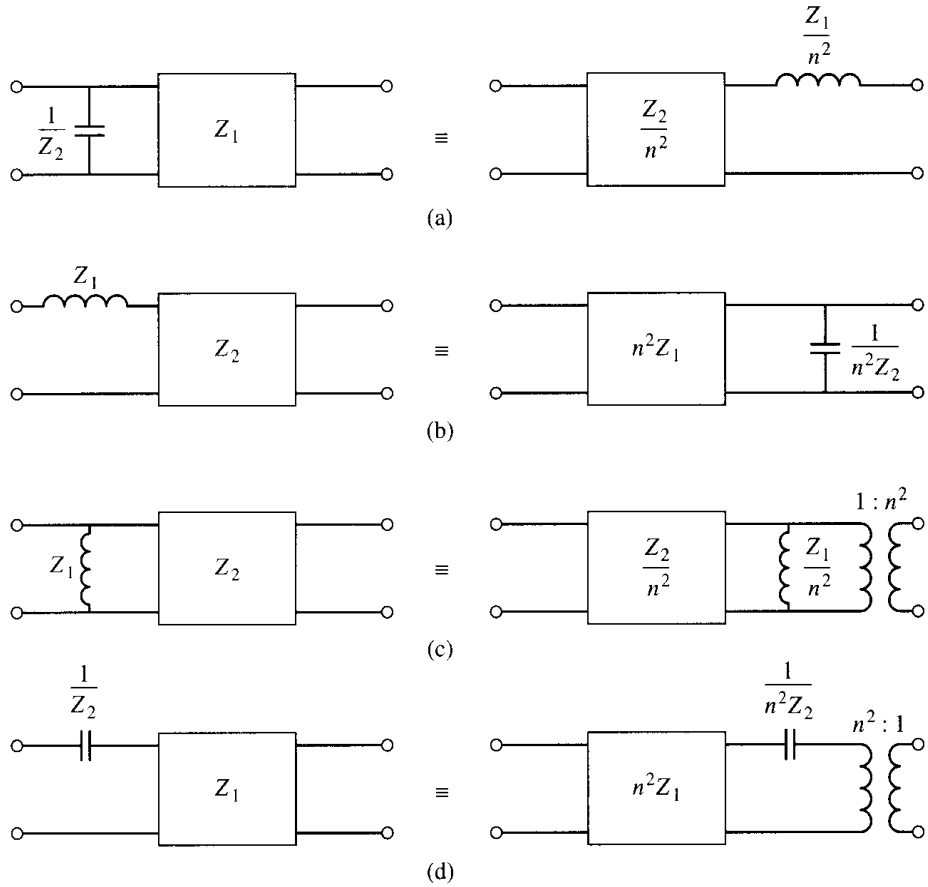

where $n^2 = 1 + Z_2/Z_1$

Solution:
From Table 2, the normalized low-pass prototype element values are

$$g_1 := 3.3487 \qquad L_1 := g_1$$

$$g_2 := 0.7117 \qquad C_2 := g_2$$

$$g_3 := 3.3487 \qquad L_3 := g_3$$

$$g_4 := 1.0000 \qquad R_L := g_4$$

with the lumped element circuit shown in Figure 8a.

The next step is to use Richard's transformations to convert series inductors into series stubs, and shunt capacitors to shunt stubs. According to (15) the normalized impedances for λ/8 length stubs are

$$Z_{L1} := L_1 \qquad Z_{C2} := \frac{1}{C_2} \qquad Z_{L3} := L_3$$

The series stubs would be very difficult to implement in microstrip form, so we will use the Kuroda identity (b) from Table 4 to convert these to shunt stubs. Assuming matching elements at both ends of the filter, we have

$$n := \sqrt{1 + \frac{R_L}{Z_{L1}}} \qquad n^2 = 1.299$$

so that the characteristic impedances of the three shunt elements and the two series lines become

$$Z_{sh1} := n^2 \cdot Z_0 \qquad Z_{sh2} := Z_{C2} \cdot Z_0 \qquad Z_{sh3} := n^2 \cdot Z_0$$

$$Z_{se1} := n^2 \cdot Z_{L1} \cdot Z_0 \qquad Z_{se2} := n^2 \cdot Z_{L3} \cdot Z_0$$

or

$$Z_{sh1} = 64.931\,\text{ohm} \qquad Z_{sh2} = 70.254\,\text{ohm} \qquad Z_{sh3} = 64.931\,\text{ohm}$$

$$Z_{se1} = 217.435\,\text{ohm} \qquad Z_{se2} = 217.435\,\text{ohm}$$

Figure 8. Mathcad document for the solution of the microstrip filter.

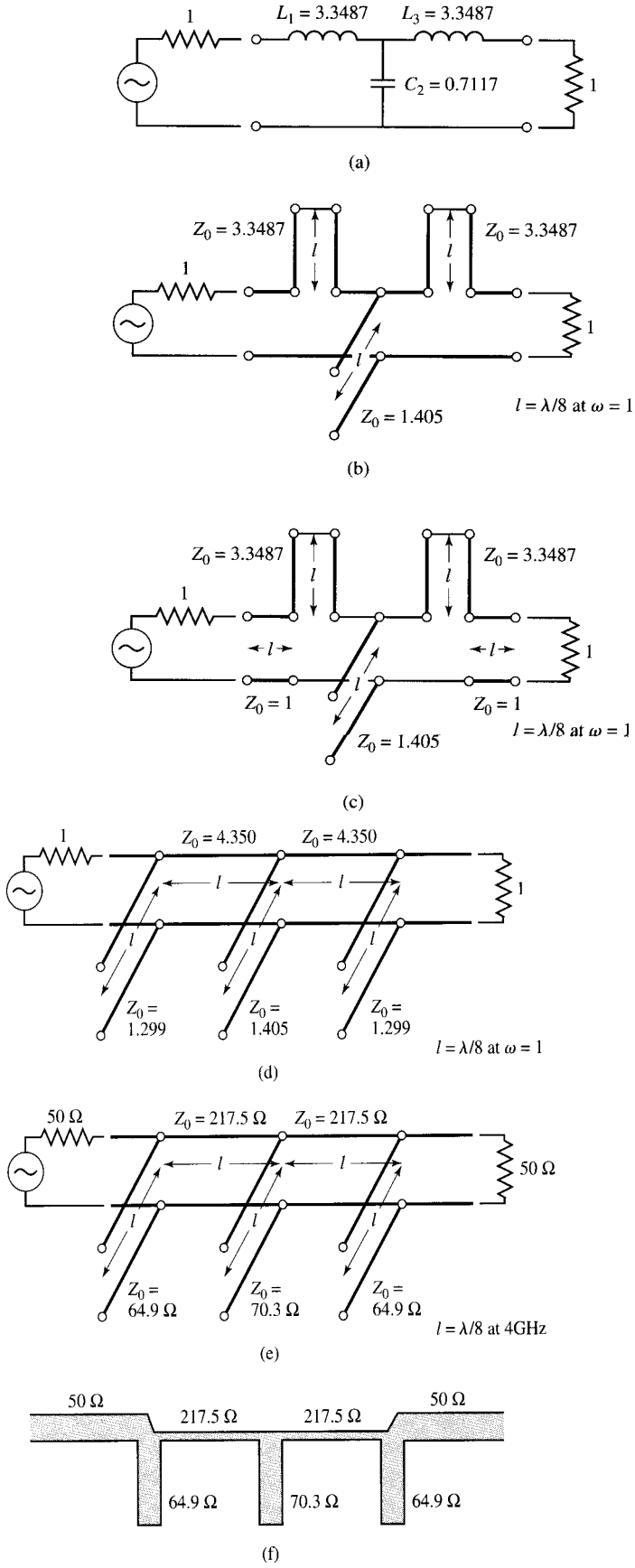

Figure 9. Filter design. (a) Lumped-element low-pass filter prototype. (b) Richard's transformations - convert inductors and capacitors to series and shunt stubs. (c) Add unit elements at ends of the filter. (d) Apply the second Kuroda identity. (e) Impedance and frequency scaling. (f) Microstrip fabrication of the final filter.

We use Serenade Design Suite to simulate the microstrip filter. The schematic and results are shown in Figures 10 and 11.

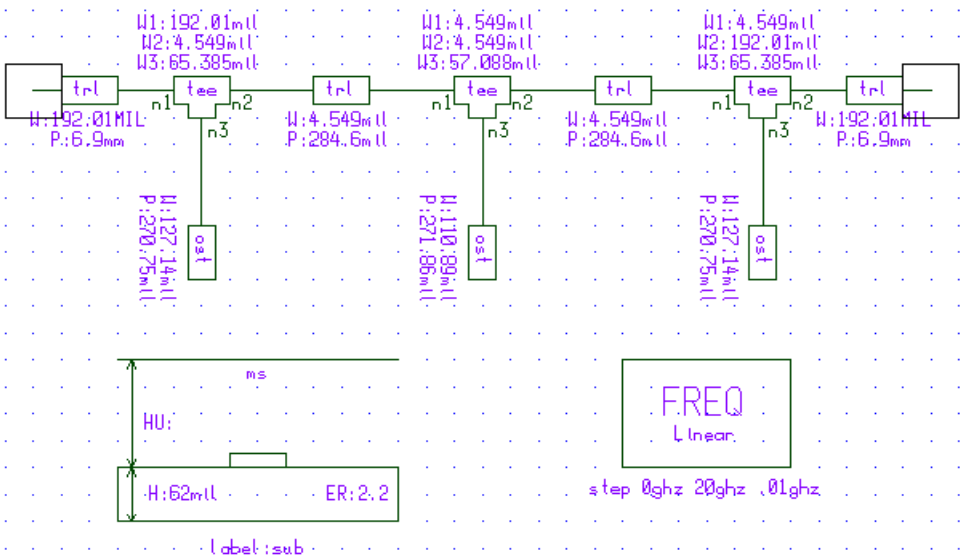

Figure 10 Schematic of the microstrip low-pass filter.

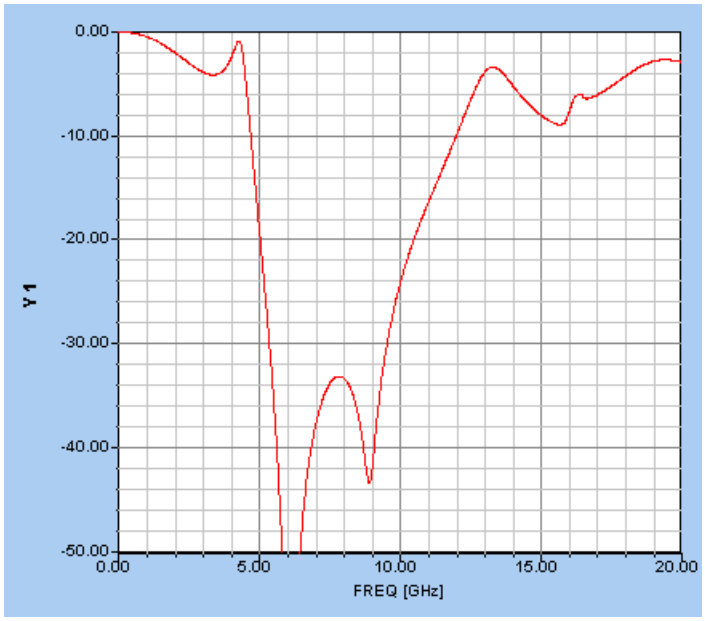

Figure 11. $|S_{21}|$ (dB) for the microstrip low-pass filter.

Note that the passband characteristic is only low-pass up to about 6 GHz. Beyond that, the response is more like a band reject. This is a result of the periodic nature of Richard's Transformation.

STEPPED-IMPEDANCE LOW-PASS FILTERS

A relatively easy way to implement low-pass filters in microstrip or stripline is to use alternating sections of wide (low impedance, capacitive in nature) and narrow (high impedance, inductive in nature) sections of line. A procedure for calculating physical dimensions of transmission lines is given in [1], Section 8.6. We will use the Filter Synthesis tool in Serenade Design Suite to accomplish the design Example.

The filter synthesis program can be started by selecting **Filter Synthesis** from the **Tools** pull-down menu in Serenade. This will launch FilterSyn, which is a separate executable. The following window will appear:

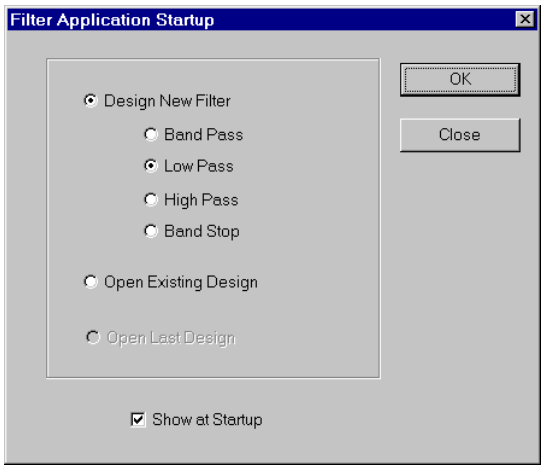

For this example, we are designing a low-pass filter so we choose Low Pass and click OK. The following window appears:

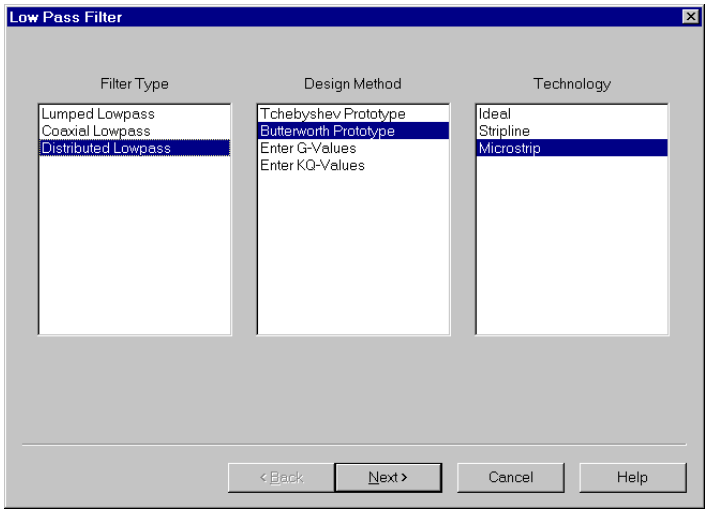

Since we want to realize this filter using microstrip and it is to be maximally flat, we choose Distributed Lowpass for the filter type, Butterworth Prototype for the Design Method, and Microstrip for the Technology. Next produces the following Specifications window:

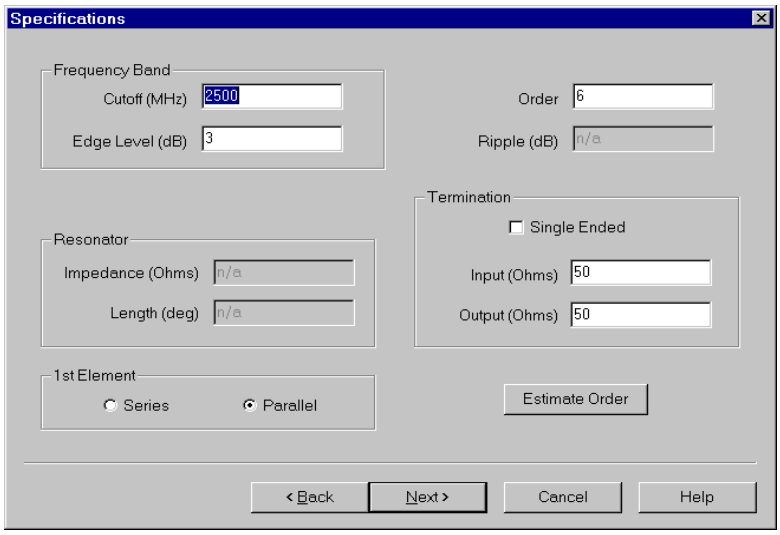

The filter impedance is 50 Ω, we choose the first element to be parallel (a capacitance), the cutoff frequency (Edge Level is 3 dB) is 2.5 GHz, and it is necessary to have more than 20 dB insertion loss at 4.0 GHz. Choosing the Estimate Order button brings up the following window:

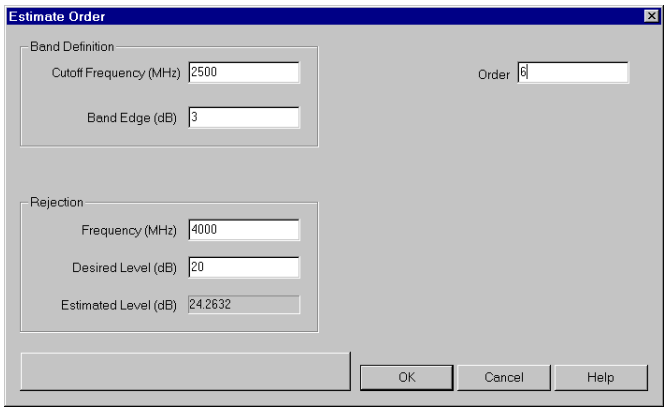

Input of the parameters for the insertion loss with Order = 5 gives 20.247 dB. To be on the save side, we choose Order = 6 so that the insertion loss will be 24.2632 dB at 4 GHz. Choosing OK in this window and Next on the Specifications window will produce the Enter resonator impedances window:

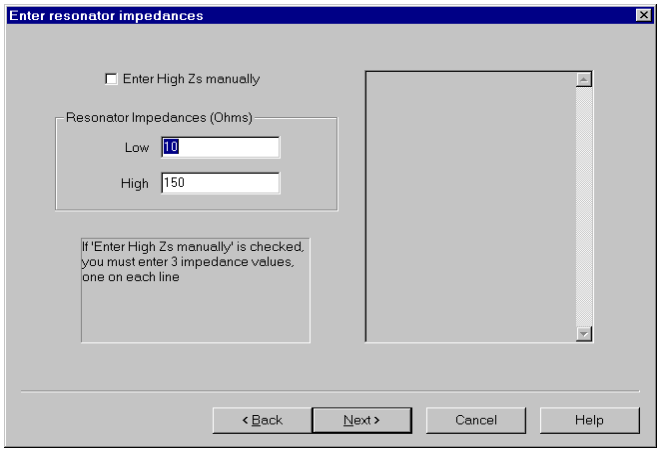

The problem statement indicates that the highest and lowest practical impedances are 150 Ω and 10 Ω respectively. These are our inputs for this window. Selecting next will bring up the Mircrostrip dimensions window:

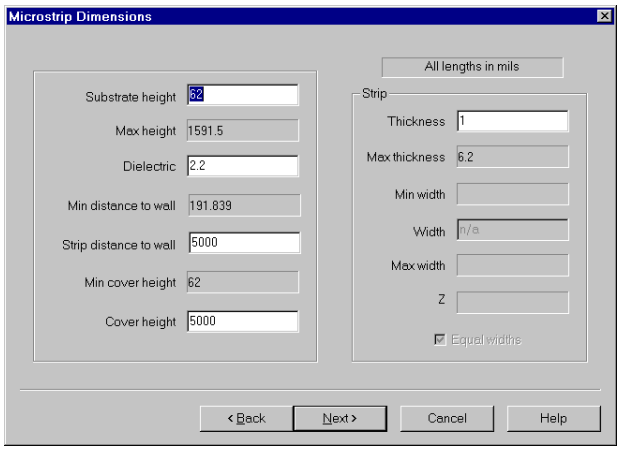

We input the dimensions of the microtrip. Since we will use open microtrip, we choose large values for distances to the wall and the cover height. Finally, we select Next and Finish to arrive at the following design with electrical lengths (note that the lengths are slightly different from that of the example in [1]):

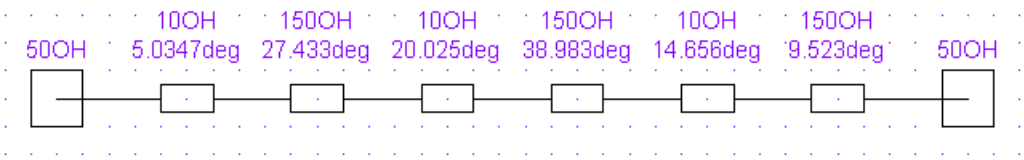

This can then be exported to a new project file in Serenade Design Suite by selecting File - Export physical schematic. Prompts for naming the new project follow. Once in Serenade Design Suite we get the following physical schematic with properly dimensioned microstrip transmission line sections:

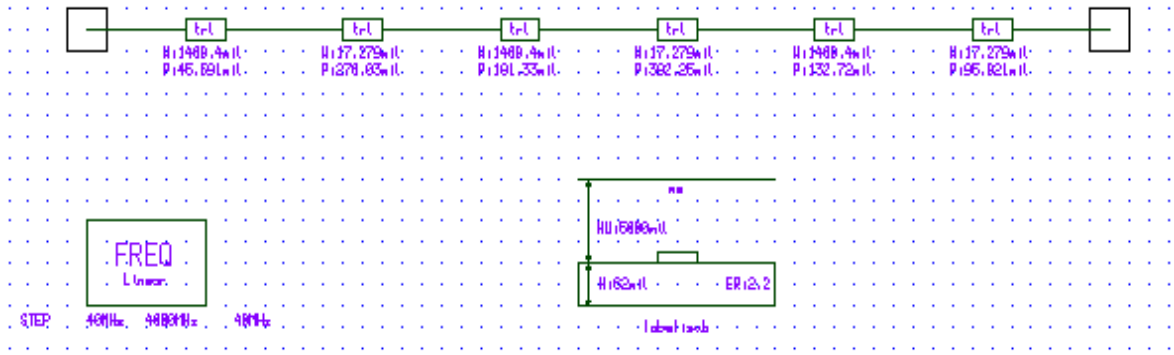

Running the analysis produces the following report graph for $|S_{21}|$ in dB.

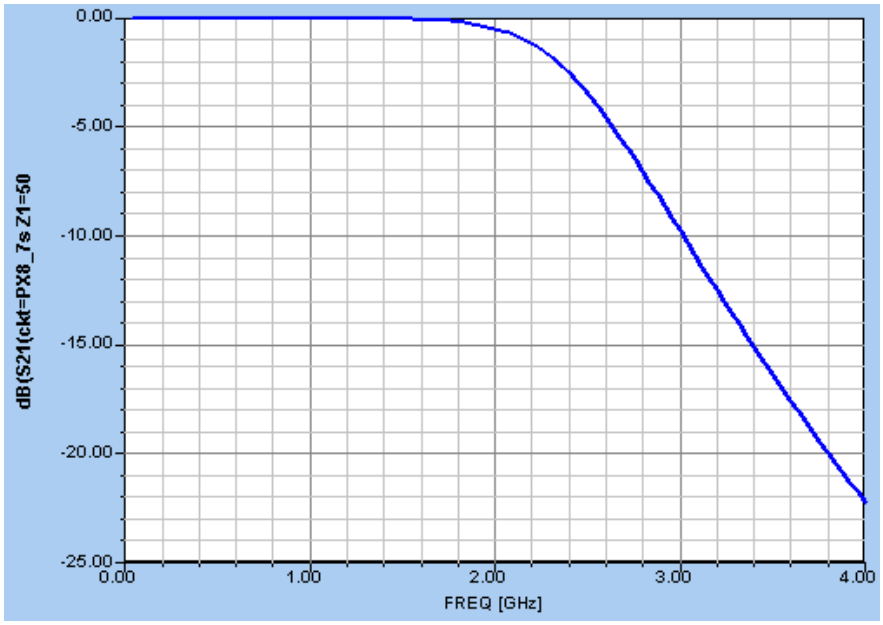

COUPLED LINE FILTERS

Once again we will use the Filter Synthesis tool this section. Design a coupled line bandpass filter with N = 3 and a 0.5 dB equal-ripple response. The center frequency is 2.0 GHz, the bandwidth is 10%, and Z_0 = 50 Ω . What is the attenuation at 1.8 GHz?

Go to Serenade Design Suite and create a new project. Select Tools-Filter Synthesis from the menu; Bandpass from the Filter Application Startup window; and Edge Coupled Half Wave, Tchebyshev Prototype, and Microstrip from the Band Pass Filter window. This brings us to the Specifications Window where we put in the problem specifications. Next brings up the microstrip dimensions window. We use a substrate thickness of 62 mils, a cover height of 5000 mils (essentially no cover), a dielectric constant of 2.2, and a strip thickness of 1 mil.

[1][] G. L. Mattheai, L. Young and E. M. T. Jones, *Microwave Filters, Impedance-Matching Networks and Coupling Structures*, Artech House, Dedham, MA, 1980.
[2][] W. A. Davis, *Microwave Semiconductor Circuit Design*, Van Nostrand Reinhold, NY, 1984
[3][] P. I. Richard, "Resistor-Transmission Line Circuits," *Proc. Of the IRE*, vol. 36, pp. 217 - 220, February 1948.